INSTALLATION INSTRUCTIONS
Fence System Assembly
30' Wide

unicourt™
ONE COURT FOR ALL SPORTS
UNICOURT Is a trademark for Douglas Industries, Inc

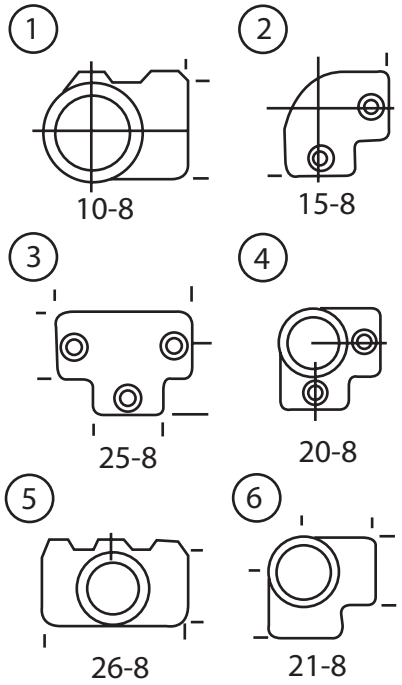

Parts List:

18	A- 61 1/4" o.d. Tubes	4	25-8 Kee Klamp
24	B- 58 3/4" o.d. Tubes	4	26-8 Kee Klamp
10	D- 31 1/4" o.d. Tubes	4	WDN-420 6' x 9'7"
4	10-8 Kee Klamp	2	WDN-420 6' x 4'6"
4	15-8 Kee Klamp	1	WDN-420 6' x 29'
4	20-8 Kee Klamp	1	600' Spool BNC
4	21-8 Kee Klamp	10	2" i.d. Ground Sleeves

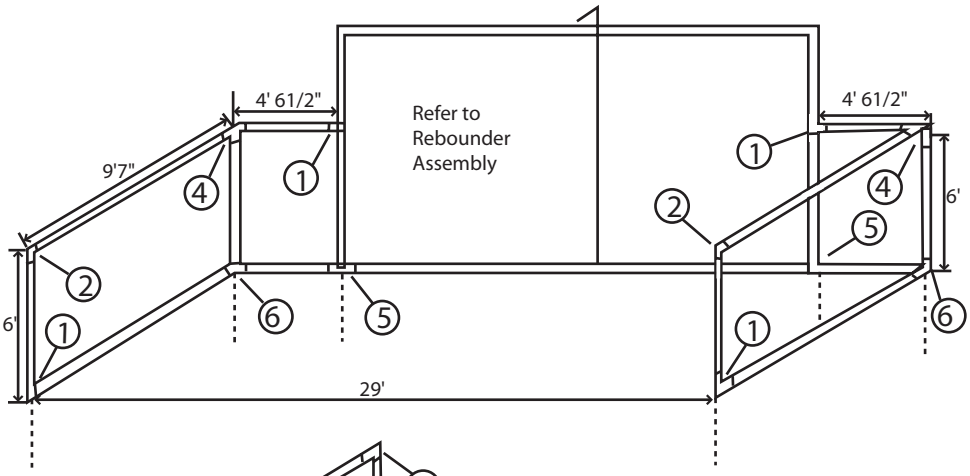

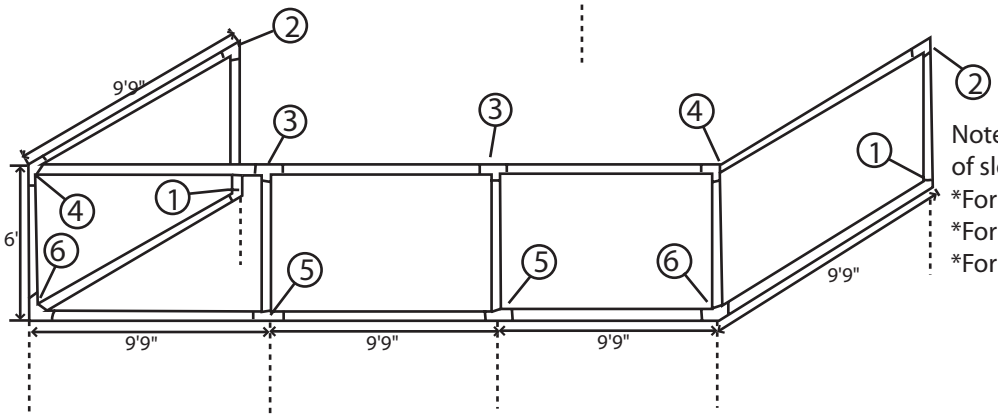

Note: Measurements are center of sleeve to center of sleeve
*For 9'9" lengths use Posts A & B and cut to length
*For 7'6" lengths use B & D
*For 4'61/2" use A

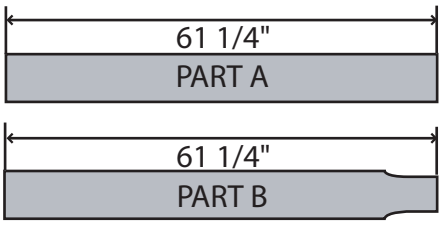

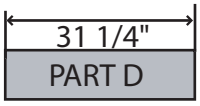

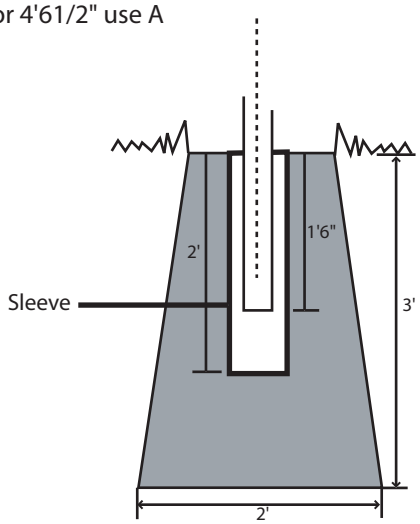

douglas®

Manufactured by Douglas Industries, Inc.

INSTALLATION INSTRUCTIONS
Fence System
x 16 GAGE

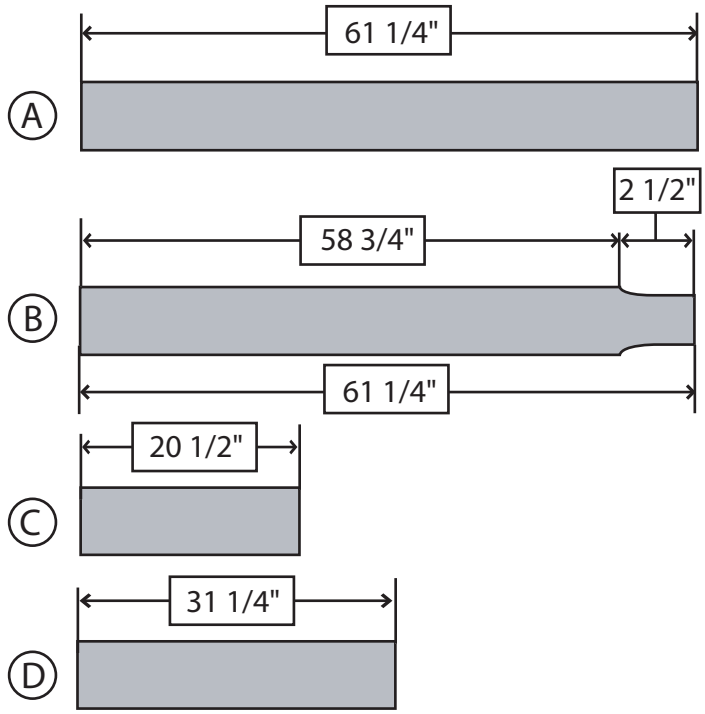

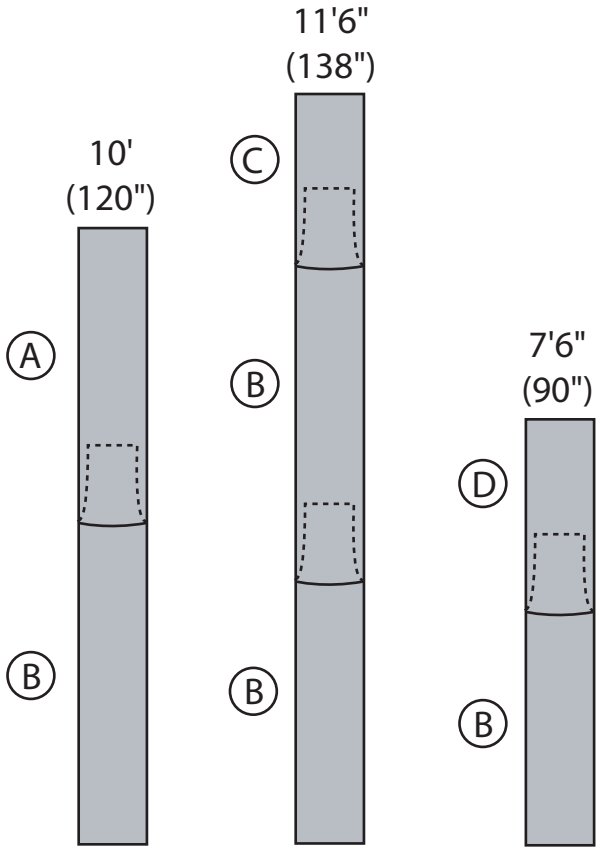

Manufactured by Douglas Industries, Inc.